12.9 SPHERICAL ROLLER THRUST BEARINGS

Spherical roller thrust bearings have a large number of asymmetrical spherical rollers with good adhesion to shaft and housing rings, making them suitable for capturing large axial loads as well as certain radial loads at relatively high speeds. Bearings are detachable, which can be utilized during installation. Bearings are manufactured with a pressed steel-sheet cage, which forms an integral unit with the shaft ring and spherical rollers. In addition, ZKL also manufactures bearings with a massive cage. A massive brass cage is guided by the sleeve fastened in the shaft ring bore and together also form an integral unit. The internal bearing design with massive cage requires oil lubrication. In other cases, the bearings may also be lubricated with greases – preferably with EP additives. In such cases, a sufficient amount of lubricant must be supplied into contact with the spherical roller faces and the guide flanges. Both variants of the structural design are illustrated in figure 12.9.1.

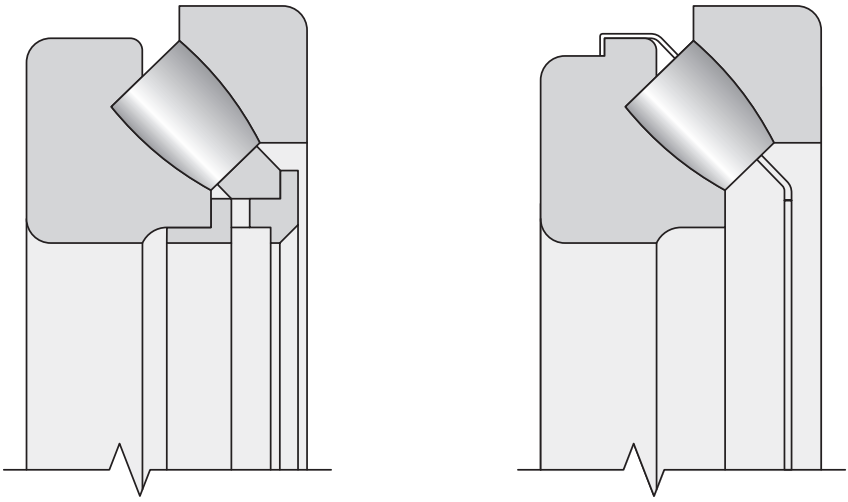

Fig. 12.9.1

Main dimensions

The main dimensions of bearings are consistent with standard ISO 104 and are listed for individual bearings in the tables of the publication.

Labelling

Labelling of standard bearings is specified in the tables of the publication. Divergence from the standard design is marked by additional characters specified in the catalogue introduction.

J. . . . . Bearing with cage made from steel sheeting

EJ. . . . . Optimized internal design with steel cage

M . . . . . Bearing with massive brass cage

EM . . . . . Optimized internal design with massive brass cage

EF . . . . . Optimized internal design with massive steel cage

Cage

Spherical roller thrust bearings in "M" and "EM" versions have brass cages guided by the steel sleeve on the shaft ring. "EF" design is identical to "EM"; the cage material is steel. "J" version bearings have a steel--sheet cage guided on a shaft ring. "J" –version bearings are interchangeable with bearings with a massive brass cage. If a bearing with a massive brass cage is to be substituted in a loading, where the shaft ring is supported on the shaft by the steel sleeve face that guides the cage by a bearing designed with a sheet--metal cage, then a spacing ring must be inserted between the shaft ring and the original fitting on the shaft – see figure 12.9.2. When replacing bearings of older designs or from a different manufacturer, the dimensions of the spacing ring must also be checked or machined to the dimension needed (fig. 12.9.3). The recommended outer ring diameter is specified in the tables. The ring must be tempered and the faces must be precisely grinded.

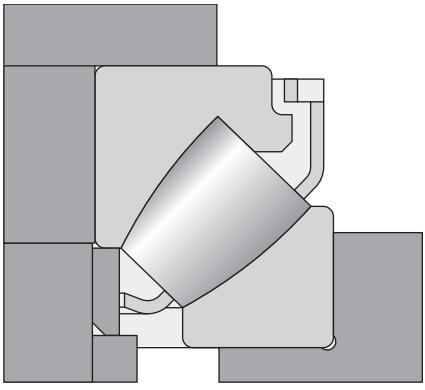

Fig. 12.9.2

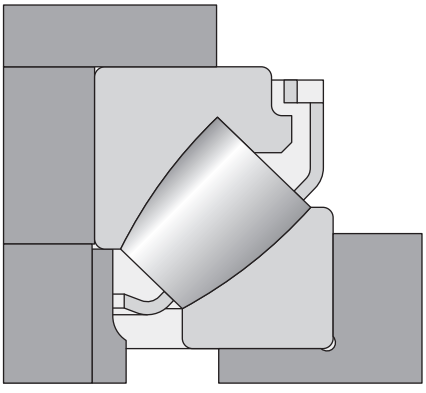

Fig. 12.9.3

Precision

Bearings are currently produced at a normal degree of precision P0, which is not marked. The dimensional and operational precision tolerances are listed in table 7.16.

Self-alignment ability

The spherical raceway of the bearing housing ring during regular operating conditions ($F_a \leq 0.1C_a$) enables self-alignment from the centre position without interfering with the proper bearing function by the values specified in the table.

Table 12.9.1

Bearing type	Permissible misalignment
292	2°
293	2°30
294	3°

Loading structure

The connecting dimensions, specified in the tables of the publication, are suitable for bearings, where the load $F_a = 0.1C_a$. Bearing rings should be supported along their entire faces during greater loads, i.e. $d_a = d1$ a $D_a = D1$.

When using bearings with a sheet-metal cage, we recommend enlarging the hub bore near the cage by 20 mm to prevent any shaft onset from coming into contact with the cage (fig. 12.9.4).

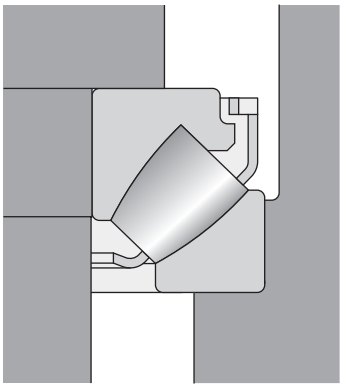

Fig. 12.9.4

Axial equivalent dynamic load

$$P_a = F_a + 1{,}2F_r \qquad (F_r \leq 0{,}55F_a) \qquad [kN]$$

Axial equivalent static load

$$P_{oa} = F_a + 2{,}7F_r \qquad (F_r \leq 0{,}55F_a) \qquad [kN]$$

The static safety coefficient for Spherical roller thrust bearings must be so ≥ 4.

Minimal axial load

Higher rotation speeds in spherical roller thrust bearings present a risk of rolling elements sliding between the raceways due to the centrifugal forces in cases, when the axial load F_a falls below the permissible value. The following relationship is used for calculating the $F_{a\,min}$ value:

when $1.8F_r < 0.0005\ C0$

$$F_{a\,min} = 0{,}0005\ C0 + M\,(0{,}001n)^2$$

otherwise

$$F_{a\,min} = 1{,}8F_r + M\,(0{,}001n)^2$$

$F_{a\,min}$ . . . . . minimal axial load [kN]

F_r . . . . . radial load [kN]

C_{oa} . . . . . axial static load rating [kN]

. . . . . (values are provided in the tables of the publication)

n . . . . . rotating speed [min-1]

M . . . . . coefficient of minimum axial load

. . . . . (values are provided in the tables of the publication)

If the external axial load of the bearing is too small or if the bearing is unloaded during operation, e.g. in bearing pairs, then an axial load must be created, e.g. by the use of springs. If a radial load is simultaneously acting, the following condition must be met: $F_r \leq 0.55F_a$.

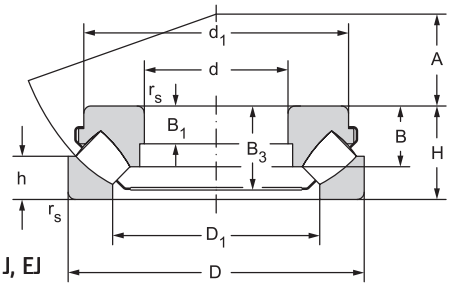

J, EJ

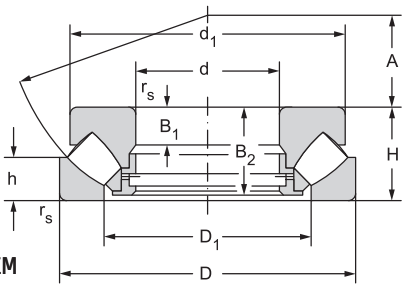

M, EM

12.9.1

Main dimensions												Basic load rating	
d	D	H	d_1	D_1	B	B_1	B_2	B_3	h	A	r_s	dynamic	static
											min	C_a	C_{oa}
mm												kN	
50	110	36	95,0	70,0	25	13		32,0	20,5	32	1,5	299	930
60	130	42	118,0	88,0	28	15	39,5	35,5	20,0	38	1,5	287	809
	130	42	112,3	87,0	27	27		37,0	20,0	38	1,2	345	951
65	140	45	128,0	96,5	28	16	42,5	38,0	21,0	42	2,0	340	973
	140	45	122,8	93,0	29,5	16		39,0	21,0	42	2,0	417	1155
70	150	48	137,0	102,0	32	17	45,5		23,0	44	2,0	371	1070
	150	48	131,6	105,0	31	17		43,5	23,0	44	2,0	453	1280
75	160	51	146,0	109,0	34,5	18	48,0		24,0	47	2,0	429	1250
	160	51	141,8	108,0	33,5	18		47,0	24,0	47	2,0	527	1500
80	170	54	155,0	116,0	36	19	51,0		24,0	50	2,1	464	1370
	170	54	150,8	116,0	36	19		46,5	24,0	50	2,1	625	1640
85	180	58	164,0	125,0	38	21	55,0		28,0	54	2,1	527	1570
	180	58	164,0	123,0	37	21		50,0	28,0	54	2,1	713	1945
90	190	60	174,0	130,0		22	57,0		29,0	56	2,1	578	1780
	190	60	170,8	130,0		22	57,0		29,0	56	2,1	724	2172
100	170	42	150,0	128,0	26,2	15		37,3	20,5	58	1,5	449	1400
	210	67	193,0	144,5		24	64,0		32,0	62	3,0	705	2170
	210	67	189,8	144,0		24	64,0		32,0	62	2,5	891	2578
110	190	48	176,0	143,0		16	45,5		23,0	64	2,0	442	1420
	190	48	176,0	143,0	31	16		42,0	23,0	64	2,0	587	1760
	230	73	212,0	160,0		26	69,0		35,0	69	3,0	817	2600
	230	73	209,5	159,0		27			35,0	69	2,5	1053	3078
120	210	54	194,0	157,5		18	51,0		26,0	70	2,1	577	1830
	210	54	187,1	155,5	35,5	19		47,0	27,0	70	2,1	670	2100
	250	78	229,0	172,0		29	74,0		37,0	74	4,0	934	3000
	250	78	226,8	173,0		29			37,0	74	4,0	1215	3590
130	225	58	205,0	170,0	37	19	55,0		28,0	76	2,1	647	2070
	225	58	201,5	165,7		21		49,6	30,1	76	2,1	788	2950
	270	85	247,0	188,0	55,5	31	81,0		41,0	81	4,0	1090	3540
	270	85	245,0	188,0		31		74,0	41,0	81	4,0	1437	4300

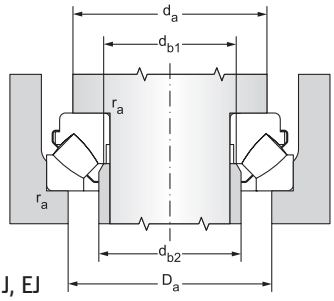

J, EJ

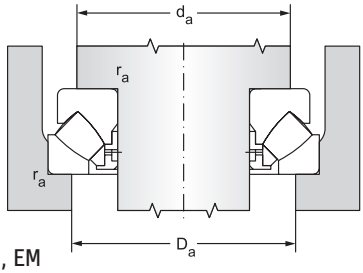

M, EM

Deliveries of bearings marked * must be first consulted with the manufacturer, ** NEW FORCE

Fatique load limit	Limiting speed for lubrication with	Bearing designation	Abutment and fillet dimensions						Weight	Minimum axial load factor
			d	d_a	d_{b1}	D_a	d_{b2}	r_a	-	
P_u	oil			min	max	max	max	max		
kN	min^{-1}		mm						kg	
110	3100	**29410EJ****	50	70	55,8	90	59,5	1,5	1,67	0,11
99	2400	**29412M***	60	90		109		1,5	2,60	0,08
120	2600	**29412EJ****		90	67,0	117	67	1,5	2,47	0,11
120	2200	**29413M***	65	100		118		2,0	3,30	0,12
140	2400	**29413EJ****		100	72,0	118	72	2,0	3,26	0,17
130	2000	**29414M***	70	105		126		2,0	4,00	0,14
160	2200	**29414EJ****		105	77,5	126	77,5	2,0	3,98	0,2
150	2000	**29415M***	75	115		134		2,0	4,90	0,2
180	2200	**29415EJ****		115	82,5	134	82,5	2,0	4,90	0,28
170	1900	**29416M***	80	120		141		2,0	5,80	0,23
200	2000	**29416EJ****		120	88,0	141	88	2,0	5,80	0,34
190	1800	**29417M***	85	130		153		2,0	6,90	0,31
240	1800	**29417EJ****		130	94,0	153	94	2,0	6,67	0,47
220	1700	**29418M***	90	135		161		2,0	8,10	0,4
260	1800	**29418EJ****		135	99,0	161	99	2,0	8,10	0,59
170	2000	**29320EJ****	100	130	107,0	147	107	1,5	3,95	0,25
260	1500	**29420M***		150		178		2,5	11,8	0,59
310	1600	**29420EJ****		150	110,0	175	110	3,0	10,8	0,83
150	1600	**29322M***	110	145		165		2,0	5,50	0,25
190	1600	**29322EJ****		145	117,0	165	117	2,0	5,40	0,39
270	1400	**29422M***		165		196		2,5	14,5	0,85
320	1400	**29422EJ****		165	120,5	193	129	2,5	13,5	1,2
190	1400	**29324M****	120	160		184		2,0	7,60	0,42
220	1600	**29324EJ****		160	128,0	181	128	2,0	7,41	0,55
300	1300	**29424M***		180		212		3,0	18,1	1,1
360	1300	**29424EJ****		180	132,0	209	140	3,0	17,5	1,6
210	1300	**29326M****	130	170		198		2,0	9,30	0,54
300	1500	**29326EJ****		175	138,0	194	143	2,0	9,08	1,1
350	1200	**29426M***		195		229		3,0	22,5	1,6
430	1200	**29426EJ****		195	142,5	227	153	3,0	21,6	2,3

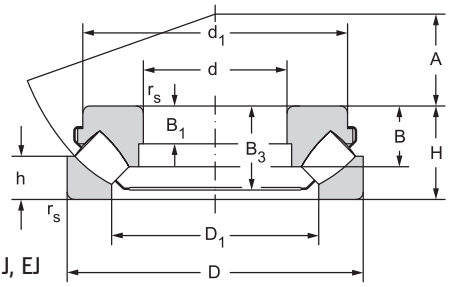

J, EJ

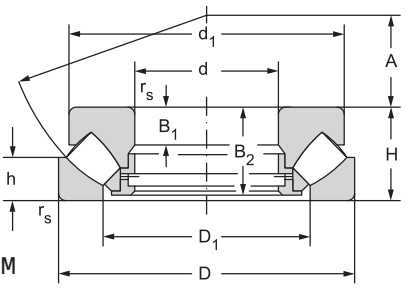

M, EM

12.9.1

Main dimensions												Basic load rating	
d	D	H	d_1	D_1	B	B_1	B_2	B_3	h	A	r_s	dynamic	static
											min	C_a	C_{oa}
mm												kN	
140	240	60	219,0	183,0		20	57,0		29,0	82	2,1	695	2310
	240	60	214,9	178,9	38,5	22		52,4	30,0	82	2,1	876	3150
	280	85	257,0	197,5		31	81,0		41,0	86	4,0	1164	3750
	280	85	254,0	196,5	54	32		74,0	41,0	86	4,0	1554	4686
150	250	60	229,0	193,0		20	57,0		29,0	87	2,1	718	2430
	250	60	222,5	189,6	38	22		53,8	28,0	87	2,1	889	3236
	300	90	276,0	211,5		32	86,0		44,0	92	4,0	1318	4270
	300	90	273,0	209,5	58	34		79,0	44,0	92	4,0	1675	5241
160	270	67	248,0	207,0		23	64,0		32,0	92	3,0	831	2810
	270	67	243,6	202,3	42	24		58,6	33,0	92	3,0	1067	3977
	320	95	306,0	226,0		34	91,0		45,0	99	5,0	1504	4810
	320	95	282,8	221,7	60,5	35		82,0	45,5	99	5,0	1854	5930
170	280	67	258,0	215,0		23	64,0		32,0	96	3,0	858	2950
	280	67	253,6	214,6	42,2	24		60,0	32,0	96	3,0	1090	4098
	340	103	324,0	240,0		37	99,0		50,0	104	5,0	1669	5380
	340	103	301,0	236,0	65,5	36		88,0	50,0	104	5,0	2029	6230
180	300	73	277,0	231,0		25	69,0		35,0	103	3,0	1014	3530
	300	73	270,4	228,3	46	26		64,3	35,5	103	3,0	1280	4813
	360	109	342,0	255,0		39	105,0		52,0	110	5,0	1854	6010
	360	109	320,6	248,7	69,5	38		93,0	53,0	110	5,0	2297	7160
190	320	78	294,0	246,0		27	74,0		38,0	110	4,0	1120	4010
	320	78	284,4	239,5	49	28		68,0	36,0	110	4,0	1483	4840
	380	115	360,0	270,0		41	111,0		55,0	117	5,0	2019	6610
	380	115	339,2	263,0	73	41		98,0	55,5	117	5,0	2493	7750
200	280	48	264,0	233,0	32	17	45,0		24,0	108	2,1	731	3150
	340	85	325,0	261,0		29	81,0		41,0	116	4,0	1300	4740
	340	85	302,8	253,6	53,5	29		73,0	40,0	116	4,0	1669	5480
	400	122	365,0	284,0		43	117,0		59,0	122	5,0	2210	7510
	400	122	355,7	276,5	77	43		104,0	59,4	122	5,0	2791	8790
220	300	48	286,0	252,0		17	46,0		24,0	117	2,0	757	3350
	360	85	345,0	280,0		29	81,0		41,0	125	4,0	1340	4970
	360	85	324,4	273,0	55	29		74,0	41,0	125	4,0	1792	6300
	420	122	400,0	305,0		43	117,0		58,0	132	6,0	2328	7970
	420	122	375,3	296,0	77	44		103,0	58,5	132	6,0	2905	9070

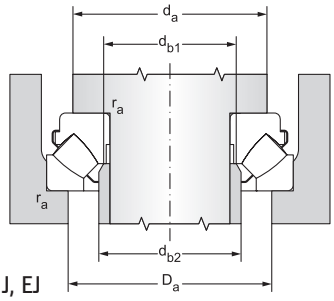

J, EJ

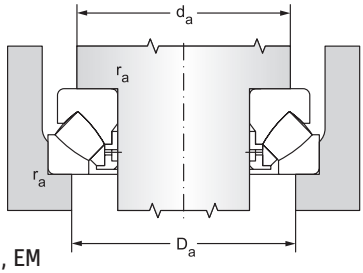

M, EM

Deliveries of bearings marked * must be first consulted with the manufacturer, ** NEW FORCE

Fatique load limit	Limiting speed for lubrication with	Bearing designation	Abutment and fillet dimensions						Weight	Minimum axial load factor
			d	d_a	d_{b1}	D_a	d_{b2}	r_a	-	
P_u	oil			min	max	max	max	max		
kN	min^{-1}		mm						kg	
230	1300	**29328M****	140	185		211		2,0	11,0	0,67
320	1400	**29328EJ****		185	148,0	208	154	2,0	10,5	1,2
370	1200	**29428M****		205		239		3,0	24,2	1,8
460	1200	**29428EJ****		205	153,0	239	162	3,0	23,0	2,7
240	1200	**29330M****	150	195		222		2,0	11,5	0,74
320	1400	**29330EJ****		195	158,0	219	163	2,0	10,9	1,3
410	1100	**29430M****		220		257		3,0	29,4	2,3
500	1100	**29430EJ****		220	163,0	275	175	3,0	28,2	3,4
270	1100	**29332M****	160	210		239		2,5	15,2	0,99
390	1200	**29332EJ****		210	169,0	235	176	2,5	14,4	2
450	1000	**29432M****		230		274		4,0	35,5	2,9
560	1000	**29432EJ****		235	175,0	270	179	4,0	33,3	4,4
280	1100	**29334M****	170	220		248		2,5	16,0	1,1
390	1200	**29334EJ****		220	178,0	245	187,5	2,5	15,1	2,1
500	940	**29434M****		245		291		4,0	43,7	3,6
570	950	**29434EJ****		250	185,0	286	199	4,0	40,1	4,9
330	1000	**29336M****	180	235		266		2,5	20,3	1,6
450	1100	**29336EJ****		235	189,0	262	195	2,5	19,1	2,9
540	890	**29436M****		260		307		4,0	52,0	4,5
650	900	**29436EJ****		265	195,0	304	210	4,0	48,1	6,4
370	940	**29338M***	190	250		283		3,0	24,8	2
450	1100	**29338EJ****		250	199,0	280	208,5	3,0	23,3	2,9
590	840	**29438M****		275		325		4,0	60,0	5,5
690	850	**29438EJ****		280	206,0	321	223	4,0	55,7	7,5
300	1150	**29240EM****	200	235		260		2,0	8,76	1,2
430	890	**29340M***		265		300		3,0	33,0	2,8
500	950	**29340EJ****		265	211,0	300	221,5	3,0	28,9	3,8
660	790	**29440M***		290		343		4,0	69,0	7,1
770	800	**29440EJ****		298	217,5	334	234	4,0	66,3	9,7
310	1300	**29244EM****	220	285		260		2,0	9,64	1,4
440	840	**29344M***		285		320		3,0	32,8	3,1
560	950	**29344EJ****		285	229,0	316	237,5	3,0	31,6	5
690	750	**29444M****		310		364		5,0	74,0	7,9
780	750	**29444EJ****		315	238,0	355	254	5,0	69,1	10

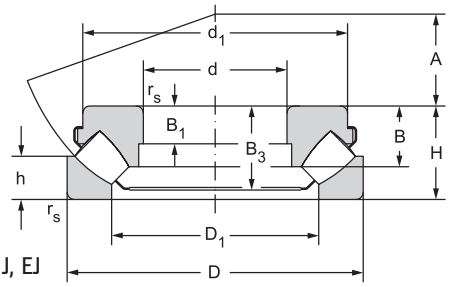

J, EJ

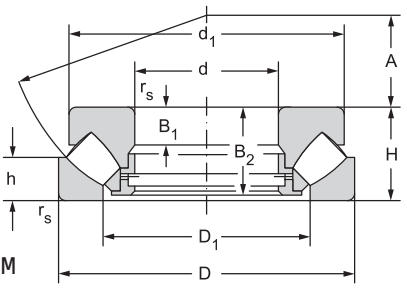

M, EM

12.9.1

Main dimensions												Basic load rating	
d	D	H	d_1	D_1	B	B_1	B_2	B_3	h	A	r_s	dynamic	static
											min	C_a	C_{oa}
mm												kN	
240	340	60	330,0	283,0		19	57,0		30,0	130	2,1	793	3450
	380	85	365,0	300,0		29	81,0		41,0	135	4,0	1340	5190
	380	85	343,7	294,8	54	29		75,0	40,5	135	4,0	1844	6490
	440	122	420,0	321,0		43	117,0		59,0	142	6,0	2410	8420
	440	122	393,0	320,0	76	44		103,0	59,0	142	6,0	3039	9770
260	360	60	350,0	302,0		19	57,0		30,0	139	2,1	825	3650
	420	95	405,0	325,0		32	91,0		45,0	148	5,0	1780	6820
	420	95	380,3	320,4	61	32		84,0	46,0	148	5,0	2307	8310
	480	132	460,0	346,0		48	127,0		64,0	154	6,0	2812	9870
	480	132	430,7	344	86	48		117	63	154	6	3667	12080
280	380	60	370,0	323,0		19	57,0		30,0	150	2,1	872	3950
	440	95	423,0	345,0		32	91,0		46,0	158	5,0	1780	7100
	440	95	401,7	342,1	62	32		84,0	45,0	158	5,0	2276	8490
	520	145	495,0	380,0		52	140,0		68,0	166	6,0	3327	11840
	520	145	468,9	370,8	95	52		125,0	70,0	166	6,0	4604	15750
300	420	73	405,0	355,0		21	69,0		38,0	162	3,0	1061	4670
	480	109	460,0	375,0		37	105,0		50,0	168	5,0	2180	8500
	480	109	431,9	366,7	70	36		95,0	51,0	168	5,0	2730	11000
	540	145	515,0	398,0		52	140,0		70,0	175	6,0	3317	11850
	540	145	489,2	370,0	95	55		128,0	70,0	175	6,0	4645	16460
320	440	73	430,0	375,0		21	69,0		38,0	172	3,0	1102	4930
	500	109	482,0	395,0		37	105,0		53,0	180	5,0	2180	8850
	500	109	456,1	387,0	78	37		95,0	53,0	180	5,0	2936	10920
	580	155	555,0	430,0		55	149,0		75,0	191	7,5	4007	14690
	580	155	525,6	421,8	102	55		134,0	74,5	191	7,5	5160	21200
340	460	73	436,0	389,5		21	69,0		37,0	183	3,0	1442	6600
	540	122	520,0	424,0		41	117,0		59,0	192	5,0	2719	10550
	620	170	590,0	452,0		61	164,0		82,0	201	7,5	4481	16410
	620	170	561,8	442,2	112	54		146,0	84,0	201	7,5	5995	25080
360	500	85	485,0	420,0		25	81,0		44,0	194	4,0	1442	6600
	560	122	540,0	444,0		41	117,0		59,0	202	5,0	2730	11030
380	520	85	505,0	440,0		27	81,0		42,0	202	4,0	1597	7510
	670	175	622,0	504,0		63	168,0		85,0	222	7,5	4841	19100

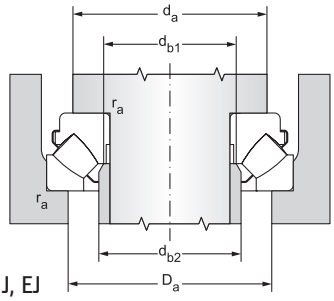

J, EJ

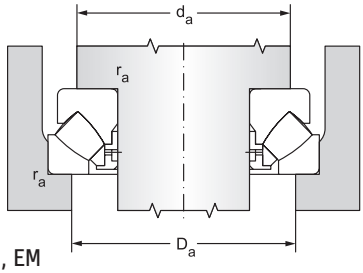

M, EM

Deliveries of bearings marked * must be first consulted with the manufacturer, ** NEW FORCE

Fatique load limit	Limiting speed for lubrication with	Bearing designation	Abutment and fillet dimensions						Weight	Minimum axial load factor
			d	d_a	d_{b1}	D_a	d_{b2}	r_a	-	
P_u	oil			min	max	max	max	max		
kN	min^{-1}		mm						kg	
310	890	**29248M****	240	285		311		2,0	16,7	1,5
450	790	**29348M***		300		340		3,0	35,3	3,4
560	900	**29348EJ****		305	249,0	336	256	3,0	33,4	5,3
710	750	**29448M****		330		383		5,0	79,0	8,9
830	750	**29448EJ****		335	258,0	377	276	5,0	73,5	12
320	890	**29252M****	260	305		331		2,0	18,5	1,7
580	750	**29352M***		330		374		3,0	48,5	5,8
700	800	**29352EJ****		335	272,0	370	283,2	4,0	46,9	8,6
810	670	**29452M****		360		419		5,0	105	12
990	670	**29452EJ****		406	278	378	296	5	96,1	18
340	840	**29256M****	280	325		351		2,0	19,5	2
590	710	**29356M***		350		394		4,0	52,5	6,3
710	800	**29356EJ****		355	293,0	390	302	4,0	49,5	9
950	630	**29456M***		390		453		5,0	132	18
1 300	630	**29456EJ****		395	298,0	446	316,5	5,0	127	31
390	750	**29260M****	300	355		386		2,5	30,5	2,7
690	630	**29360M***		380		429		4,0	74,0	9
890	700	**29360EJ****		385	312,0	423	325,8	4,0	68,7	15
940	600	**29460M***		410		471		5,0	140	18
1 300	600	**29460EJ****		415	318,0	465	339	5,0	133	34
400	710	**29264M****	320	375		406		2,5	32,9	3
710	630	**29364M***		400		449		4,0	77,0	9,8
870	670	**29364EJ****		405	332,0	442	336	4,0	72,1	15
1 100	560	**29464M***		435		507		6,0	175	27
1 600	560	**29464EJ****		450	342,0	500	364	6,0	164	56
530	850	**29268EM****	340	400		422		2,5	33,0	5,4
820	560	**29368M****		430		484		4,0	103	14
1 300	500	**29468M****		465		451		6,0	218	34
1 900	380	**29468EJ****		475	358,0	530	364	6,0	211	79
520	630	**29272M****	360	420		461		3,0	51,8	5,4
850	560	**29372M****		450		504		4,0	107	15
580	600	**29276M****	380	440		480		3,0	52,8	7,1
1 400	470	**29476EM****		504		570		6,0	263	46

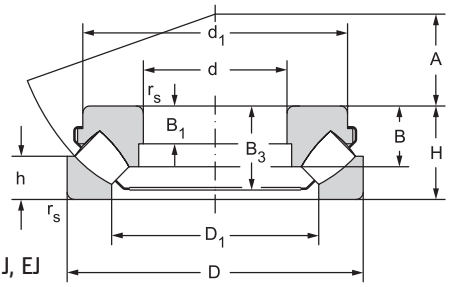

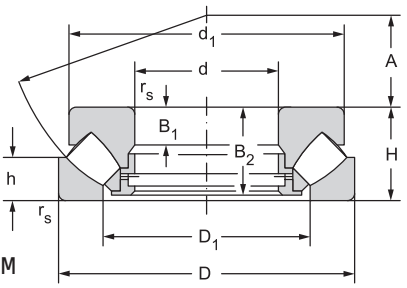

12.9.1

Main dimensions												Basic load rating	
d	D	H	d_1	D_1	B	B_1	B_2	B_3	h	A	r_s	dynamic	static
											min	C_a	C_{oa}
mm												kN	
400	540	85	526,0	460,0		27	81,0		42,0	212	4,0	1648	7900
	620	132	596,0	494,0		44	127,0		64,0	225	6,0	3389	14120
	710	185	680,0	530,0		67	178,0		89,0	236	7,5	7014	26500
420	580	95	553,0	484,2		30	91,0		46,0	225	5,0	2369	11230
	650	140	626,0	520,0		48	135,0		68,0	235	6,0	3512	14700
	730	185	663,0	540,0		67	175,0		90,0	244	7,5	7056	31020
440	680	145	655,0	546,0		49	140,0		70,0	245	6,0	3976	16850
	780	206	745,0	576,0		74	199,0		100,0	260	9,5	6468	24650
	780	206	718	554		77	199		101	257	9,5	8250	33270
480	650	103	635,0	554,0	61	33	99,0		55,0	259	6,0	1978	11000
	850	224	772,0	611,6		81	214,0		108,0	280	9,5	9935	44398
500	670	103	654,0	574,0		33	99,0		55,0	268	5,0	2472	12120
	750	150	725,0	611,0		51	144,0		74,0	280	6,0	4347	18660
	870	224	801,0	625,6		81	218,0		110,0	290	9,5	10326	48568
530	800	160	772,0	648,0		54	154,0		76,0	295	7,5	5284	22730
600	800	122	760,0	680,0		44	117,0		60,0	321	5,0	3832	19060
	900	180	850,0	731,0		64	171,0		87,0	335	7,5	7004	31500
630	850	132	820,0	724,0		42	127,0		67,0	338	6,0	4378	22500
	950	190	880	743		68	183		92	359	9,5	8940	38700
	1090	280	995	796		107	270		137	365	12	15244	63200
670	900	140	858,0	762,0		50	130,0		73,0	361	6,0	4635	23280
	1150	290	1045	844		110	280		141	387	15	16274	69300
710	1060	212	985	835		74	205		103	405	9,5	10506	46400
	1220	308	1110,0	899,0		118	298,0		149,0	415	15,0	18128	76500
750	1000	150	950	838		52	144		74	409	6	6448	31600
	1120	224	1086	890		76	216		109	415	9,5	9909	45800
	1280	315	1170	942		122	305		153	436	15	19776	86600

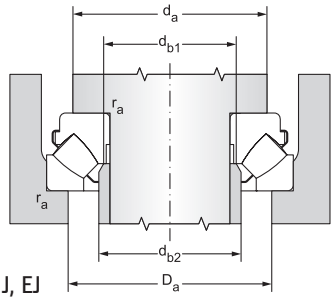

J, EJ

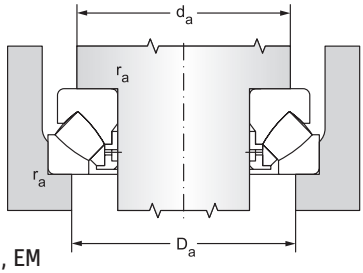

M, EM

Deliveries of bearings marked * must be first consulted with the manufacturer, ** NEW FORCE

Fatique load limit	Limiting speed for lubrication with	Bearing designation	Abutment and fillet dimensions						Weight	Minimum axial load factor
			d	d_a	d_{b1}	D_a	d_{b2}	r_a	-	
P_u	oil			min	max	max	max	max		
kN	min^{-1}		mm						kg	
610	600	**29280M****	400		460,0	500	3		55,3	7,8
1 100	500	**29380M****			498,0	557	5		150	25
1 900	450	**29480EM****			550,0	615	6		306	88
850	700	**29284EM****	420	500		525		4	73,0	16
1 100	450	**29384M****			523,0	585	5		170	27
2 200	430	**29484EM****			592,0	684	8		308	120
1 200	450	**29388M****	440		548,0	614	5		190	35
1 700	400	**29488M****			592,0	684	8		407	76
2 400	380	**T29488EM****		612		662		8	412	140
800	500	**29296M****	480		558,0	603	4		96,5	15
3 100	340	**29496EM****			660,0	735	8		518	250
870	470	**292/500M****	500		578,0	622	4		101	18
1 300	400	**293/500M****			613,0	680	5		220	44
3 300	340	**294/500EM****		685		755		8	548	290
1 600	380	**293/530M****	530		651,0	724	6		286	65
1 300	450	**292/600EM****	600	700		725		4	160	45
2 100	330	**293/600EM****			735,0	815	6		390	120
1 500	350	**292/630M****	630		730,0	789	5		211	63
2500	320	**293/630EM****		795		860		8	488	190
4000	260	**294/630EM****		860		950		10	1108	500
1 500	380	**292/670EM****	670	790		815		5	237	68
4300	240	**294/670EM****		905		1000		12	1269	600
2900	280	**293/710EM****	710	890		960		8	665	270
4 700	220	**T 294/710EM****		970		1050		12	1420	730
2000	325	**292/750EM****	750	880		925		5	327	120
2800	260	**293/750EM****		935		1000		8	775	260
5200	200	**274/750EF****		1015		1120		12	1660	940

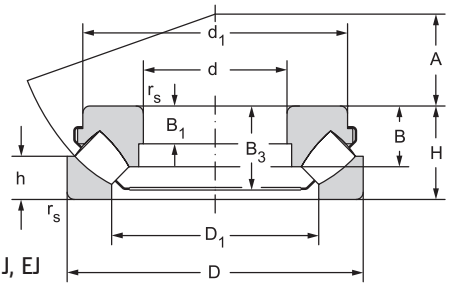

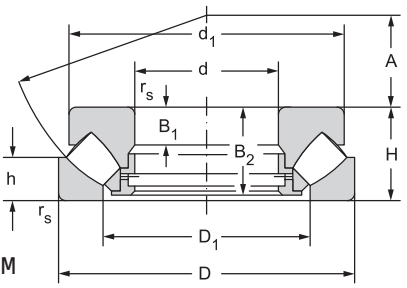

12.9.1

Main dimensions												Basic load rating	
d	D	H	d_1	D_1	B	B_1	B_2	B_3	h	A	r_s	dynamic	static
											min	C_a	C_{oa}
mm												kN	
800	1060	155	1010	890		52	149		77	434	7,5	6942	35200
	1180	230	1146	943		78	222		111	440	9,5	10506	49900
	1360	335	1300,0	1040,0		120	324,0		162,0	462	15,0	16830	72360
	1360	335	1250	1010		122	324		165	462	15	21321	94800
850	1120	160	1060	945		47	154		82	455	7,5	7117	36700
950	1250	180	1185	1056		58	174		88	507	7,5	8755	46400
1000	1460	276	1365	1165		100	267		137	561	12	18334	88100
1060	1400	206	1325	1183		66	199		100	566	9,5	11124	59600
1120	1460	206	1385	1243		70	199		97	601	9,5	11948	63100

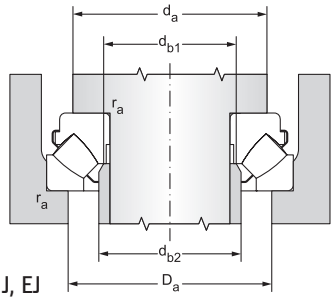

J, EJ

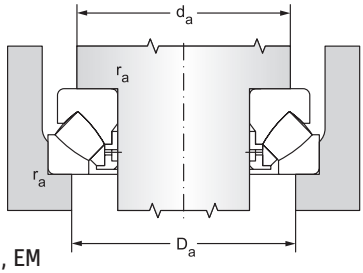

M, EM

Deliveries of bearings marked * must be first consulted with the manufacturer, ** NEW FORCE

Fatique load limit	Limiting speed for lubrication with	Bearing designation	Abutment and fillet dimensions						Weight	Minimum axial load factor
			d	d_a	d_{b1}	D_a	d_{b2}	r_a	-	
P_u	oil			min	max	max	max	max		
kN	min^{-1}		mm						kg	
2200	320	**292/800EM****	800	935		980		6	383	150
3000	240	**293/800EM****		995		1060		8	871	310
4 300	220	**294/800M ****			1055,0	1200	12		2010	650
5600	190	**294/800EF****		1080		1185		12	2039	1100
2200	300	**292/850EM****	850	980		1030		6	428	170
2700	260	**292/950EM****	950	1095		1155		6	604	270
5000	180	**293/1000EF****	1000	1245		1330		10	1560	970
3400	220	**292/1060EF****	1060	1225		1290		8	866	440
3500	220	**292/1120EF****	1120	1300		1365		8	906	500